06/05

Bedienungsanleitung

Instruction Leaflet

Universal Diopter 7002
Universal rear sight 7002

STOP

Bitte sorgfältig lesen, bevor Sie das Diopter montieren.
Please read carefully before attaching the rear sight.

ANSCHÜTZ®

DIE MEISTER MACHER

Begriffsbestimmungen / Definitions

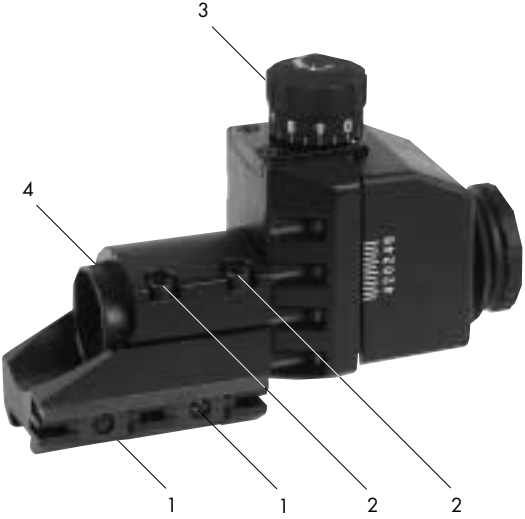

1 Klemmschrauben für Prismenklemmung
2 Klemmschrauben für Verkantungsausgleich
3 Drehknopf für Höhenverstellung
4 Skala für Verkantungseinstellung

1 Screws for rail clamping
2 Clamping screws for canting
3 Elevation knob
4 Scale for canting

Begriffsbestimmungen / Definitions

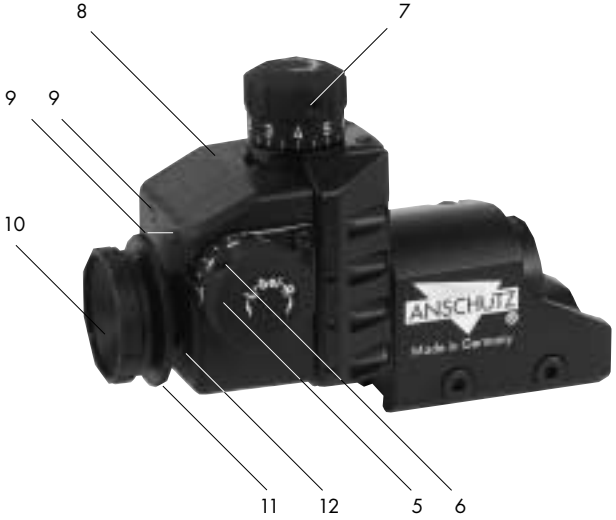

5	Drehknopf für Seitenverstellung	5	Windage knob
6	Gewindestifte für Drehknopf – Seitenverstellung	6	Set screws for windage knob
7	Gewindestifte für Drehknopf – Höhenverstellung	7	Set screws for elevation knob
8	Abdeckhaube	8	Cover
9	Obere Schrauben für Abdeckhaube	9	Upper screw for cover
10	Diopterscheibe	10	Peep sight disc
11	Klemmring	11	Clamping ring
12	Untere Schrauben für Abdeckhaube	12	Lower screw for cover

Safety instructions

⚠ **Attention**

It is important that you carefully read and understand this booklet before attaching the rear sight to your rifle. This rear sight has been designed according to state-of-the-art technology. Once the product has left our factory, the buyer is solely responsible for an adequate treatment.

The UNIVERSAL rear sight is available in the following versions:
7002/10 with 10 clicks per turn, part of sight set 7020/10.
7002L/10 with 10 clicks per turn, part of sight set 7020L/10 for left hand shooters.
7002/20 with 20 clicks per turn, part of sight set 7020/20.
7002L/20 with 20 clicks per turn, part of sight set 7020L/20 for left hand shooters.

Universal micrometer rear sight. Changing the point of impact position from click to click:		
	10 clicks	**20 clicks**
10 m	0.4 mm	0.2 mm
15 m	0.6 mm	0.3 mm
50 m	2.0 mm	1.0 mm
100 m	4.0 mm	2.0 mm
At one turn 10 clicks or 20 clicks		

Montage

The rear sight is pushed on the 11 mm grooved rail and tightened with the help of the 2 clamping screws (only tighten slightly) at the desired position. Only use the enclosed screw driver 2.5 mm.

Adjustment

The first step before making vertical and horizontal adjustments is to balance the canting. Loosen both screws No. 2 and tilt the rear sight housing until the two adjusting axles are in vertical and horizontal position. Then tighten the screws No. 2 again. The degree of canting can be seen from scale No. 3.

Vertical and horizontal adjustment

Fire several test rounds on a target to find out the point of impact of your rifle. When turning the vertical and horizontal adjustment screws the point of impact will vary from click to click.

- The point of impact is too high:
  Turn vertical adjustment screw in the direction “H“.
- The point of impact is too low:
  Turn vertical adjustment screw in the direction “T“.

- The point of impact is too far at the right:
  Turn horizontal adjustment screw in the direction “R“.
- The point of impact is too far at the left:
  Turn horizontal adjustment screw in the direction “L“.

Zeroing

After initial firing of the rifle the two adjustment screws should be in the position "0".

- Loosen pin in the screw.
- Position the screws to the value "0".
- Tighten pins in the screw manually.

⚠ **Attention**

Your ANSCHÜTZ micrometer rear sight has been carefully adjusted free from play with special tools and was tested several times. Consequently it does not need any readjusting. So only use the screws for vertical and horizontal adjustments and balance the canting as described above. Never try to force the end stops of the adjustment spindles by overturning as this would damage the adjustment drives. In order not to impair warranty claims, please contact authorized gunsmiths or our service personnel in case of any malfunction.

Change of click adjustment

Of course, changing from 10 clicks to 20 clicks can be done for you **in our factory.**

Cleaning and care

Your ANSCHÜTZ rear sight is a highly accurate device of utmost quality and therefore needs special handling. Good care and maintenance guarantee perfect functionning. Protect your rear sight from dust and dirt. **Guides and spindles must not be oiled or greased.**

Accessories

Please ask for our catalog or take a look at our websites under www.anschuetz-sport.com or www.anschutz-sporters.com. You will find the latest information there and have the possibility to subscribe to our free-of-charge newsletter.

Kennen Sie schon den **ANSCHÜTZ Newsletter?** Einfach abonnieren unter **www.anschuetz-sport.com**

Do you already know the **ANSCHÜTZ Newsletter?** Simply subscribe to it under **www.anschuetz-sport.com**

Newsletter-Abo

DIE MEISTER MACHER

J.G. ANSCHÜTZ GmbH & Co. KG
Jagd- und Sportwaffenfabrik
Daimlerstrasse 12
D-89079 Ulm / GERMANY
Postfach 11 28
D-89001 Ulm / GERMANY
Fon (++49)-(0)-731-4012-0
Fax (++49)-(0)-731-4012-700
anschuetz-sport.com
JGA-Info@anschuetz-sport.com

ANSCHÜTZ®

DIE MEISTER MACHER

DSchi . 06/05/2.000