ANSCHÜTZ

EINFACH **EINS** WERDEN!

USER MANUAL

Model

1771

J.G. ANSCHÜTZ GmbH & Co. KG

Jagd- und Sportwaffenfabrik

Daimlerstraße 12 · 89079 Ulm / Germany | Fon +49-(0)731-40 12-0 | Fax +49-(0)731-40 12-700

www.anschuetz-sport.com | www.facebook.com/OfficialAnschuetz | www.youtube.com/AnschuetzGmbH | www.instagram.com/AnschuetzGmbH

Stand 19|10|2019

1. Components/Terminology 3

2. Introduction 4

3. Key to Symbols 5

3.1 General Instructions 5
3.2 Safety Instructions 5

4. General Handling of Firearms. 6

4.1 Important Basics. 6
4.2 Shooting. 7
4.3 Maintenance 8
4.4 Transport 8
4.5 Storage 8
4.6 Hearing and Eye Protection 8

5. Legal 9

6. Intended Use 9

7. Liability. 9

8. Firearm Operations. 10

8.1 Bolt 10
8.1.1 . Install Bolt 10
8.1.2 . Bolt Operation. 11
8.1.3 . Remove Bolt 11
8.2 Safety Operations 12
8.2.1 . Safety Engagement 12
8.2.2. Safety Release. 12
8.3 Magazine 12
8.3.1 . Loading 12
8.3.2. Unloading / Uncocking the Bolt for Firearm Storage 14
8.4 Trigger 16
8.4.1 . Two Stage Trigger. 16
8.4.2. Trigger Weight 16
8.4.3. Sear engagement / sear encroachment Two stage trigger 16
8.4.4. Sear engagement / sear encroachment single stage trigger 17
8.4.5. Trigger malfunctions caused by misadjustment 17
8.4.6. Moving the trigger blade 18
8.4.7. Single stage trigger 5097/2D Tuning. . 18
8.4.8. Trigger Weight 19
8.4.9. Setting the optimum sear engagement on single stage trigger . . 19
8.4.10 Trigger malfunctions caused by misadjustment 19
8.5 Barreled Action and Stock Assembly . . 20

9. Maintenance/Cleaning. 21

9.1 General 21
9.2 Cleaning of the Barrel 22
9.3 Maintenance Intervals 22
9.4 Maintenance of the Trigger 23
9.5 Maintenance of the Bolt. 23
9.5.1 . Bolt Disassembly. 23
9.5.2. Assembling the bolt 24

10. Trouble Shooting 25

11. Disposal 25

12. Other Information. 25

13. Shooting Performance 25

14. Warranty Card 26

1. Components/Terminology

Fig. 1 Overall view of 1771 Walnut German Stock, 510 mm barrel with thread M15x1 *

[1] Stock
[2] Bolt
[3] Bolt Handle
[4] Bolt Stop
[5] Safety Lever
[6] Ejection Area
[7] Receiver
[8] Barrel
[9] Muzzle
[10] Rubber Butt Plate
[11] Studs
[12] Checkering
[13] Trigger
[14] Trigger Guard
[15] Magazin Release
[16] Detachable Magazine

Model	1771 Walnut German Stock
Weight	3,4 kg
Overall length	984 mm
Barrel length	510 mm
Design	Repeater
Caliber	.17 Hornet | 4,6 x 30 | .22 Hornet .204 Ruger | .222 Rem. | .223 Rem. .300 AAC Blackout

*Note: Your firearm can differ from the presented product image, according to the model and the equipment purchased.

2. Introduction

Dear ANSCHÜTZ friend,

Thank-you for the trust you have placed in the ANSCHÜTZ brand. Now, it's important for you to be able to rely on the quality and function of your new firearm.

To deliver precise and consistent shooting performance, shot after shot, time after time we combine our famous ANSCHÜTZ match precision barrel with the Intuitively designed receiver and our meticulously engineered bolt and trigger system. You are assured to find gunsmithing of the finest caliber. ANSCHÜTZ brings more than 160 years of experience and tradition to the manufacture of precision firearms. You will always be well equipped when you have an absolutely reliable, easy-to-use ANSCHÜTZ firearm.

Our Hunting and Match rifles are a highly complex and coordinated system. If you are unsure about the operation and the safe handling of your ANSCHÜTZ, please contact your Dealer! If necessary, they can reach out to our highly skilled technical support group that can provide quality service and support for years of trouble-free operation of your ANSCHÜTZ. Or, reach out to us directly! We would love to hear from you.

Alternatively, you can find various instructions for our products on our YouTube channel www.youtube.com/AnschuetzGmbH

At ANSCHÜTZ, we are constantly thinking about how to achieve the perfect balance between the wants and needs of our customers and todays rapidly evolving technological possibilities. We strive for innovation by closely observing our customer's expectations, but realizing the limits of ambitious technological developments in the industry.

For Generations, from our home in ULM, Germany, our team of talented Designers, Engineers and Master Craftsmen (and women!) have been led by our company's values, where respect for one another in the quest of finding the best solution for refining the perfect shot, time after time dominates our work ethics. We constantly strive for perfection.

Einfach EINS werden!
WE ARE ONE!

The ANSCHÜTZ team

3. Key to Symbols

In this user manual, the following symbols are used to distinguish between general information and particularly important information:

3.1 General Instructions

▶ Designates a handling instruction

✔ Designates a handling result

• Designates a list

☞ Designates a possible consequence of actions

3.2 Safety Instructions

⚠ Designates a safety instruction

CAUTION!

Observe the usage instructions.

NOTE!

Requirement information which describes a certain behaviour.

INSTRUCTION!

For your own safety, hearing protection should be used!

INSTRUCTION!

For your own safety, eye protection should be used!

CAUTION!

Stands for a dangerous situation that can lead to personal injury, property damage or death.

4. General Handling of Firearms

Firearms are dangerous objects requiring the utmost care in their storage and use. The following safety and warning instructions must be observed without exception!

CAUTION!

Before using the firearm, the user manual must absolutely be read through carefully. The firearm may be transferred only if it is accompanied by this user manual.

NOTE!

The firearms legislation of the relevant country is definitive and must be complied with.

4.1 Important Basics

NOTE!

The use of firearms under the influence of drugs, alcohol, and medications is not allowed. Vision, dexterity, and power of judgement can be impaired. A good physical and mental state is a prerequisite for the use of a firearm.

⚠ A firearm must only ever be used for its designated purpose.

⚠ Firearms owners are responsible for ensuring that their firearm is at no time, and especially when absent, within reach of or accessible to children or other unauthorized persons.

⚠ Firearms must not be handed over to unauthorized persons.

⚠ Only original ANSCHÜTZ magazines may be used.

⚠ The specified capacity of the magazine may not be exceeded.

⚠ Changes to the firearm or the use of non-original ANSCHÜTZ magazines and accessories can cause malfunction and will automatically void warranty.

⚠ Serious or life-threatening injuries and damages can be caused by the use of improper ammunitions, through contaminations in the barrel, or through improper cartridge components.

⚠ Firearms modified in a way that could affect safety must not be used. If a fault or malfunction is detected, the firearm must be unloaded and taken to an authorised gunsmith for repair.

⚠ In the event of external effects (e.g. corrosion, being dropped, etc.), the firearm must be checked by an authorised gunsmith.

⚠ A firearm must always be treated with the utmost caution and must be secured against falls and protected from accidental damage.

4.2 Shooting

CAUTION!

Danger to life and causes of physical damage!

Aiming the firearm at people and objects.

- ▶ When the firearm is not in use, keep the muzzle pointing in a safe direction.
- ▶ The muzzle of a firearm must never be held in a direction where it can cause damage or endanger life.

CAUTION!

Malfunction when shooting!

Shot not discharged after trigger pulled.

- ▶ Do not look into the muzzle.
- ▶ Keep the muzzle of the firearm pointing in a safe direction.
- ▶ Unload the firearm.
- ▶ Remove residue from the barrel.

⚠ Every firearm must be treated as if it were loaded.

⚠ Never pick up a firearm by the trigger.

⚠ Shooting galleries must be adequately ventilated.

⚠ Any bullet trap in the shooting gallery must be completely safe and visible.

⚠ During shooting, no one may be in the area of the target.

⚠ If sight conditions are poor, a firearm should not be used.

⚠ Do not shoot into the air, at hard or smooth surfaces, at water areas, or at targets on the horizon.

⚠ Do not shoot at targets which the shot can bounce off of or be diverted from.

⚠ In the discharge of the shot, never hold the muzzle under water or on materials or objects, so as to avoid an accident or damages to your firearm.

⚠ Only shoot the caliber intended for the barrel of the firearm.

⚠ Only clean, factory-loaded and new ammunitions may be used in the caliber intended for the firearm.

⚠ Ammunitions must correspond to the specifications of C.I.P. or SAAMI.

⚠ Only load the firearm immediately before use.

⚠ Only original ANSCHÜTZ magazines may be used.

⚠ The intended capacity of the magazine may not be exceeded.

⚠ Through the use of improper ammunitions, contaminations in the barrel, or incorrect cartridge components, life-endangering injuries and material damages can arise.

⚠ Only original ANSCHÜTZ parts may be used.

4.3 Maintenance

⚠ Before and after use, or for maintenance and cleaning work, ensure that the firearm is not loaded.

4.4 Transport

⚠ Firearms may only be transported in an unloaded condition and in locked containers.

⚠ When you are putting your firearm in a case or a soft case, always make sure that the firearm and the inside of the case or soft case are dry and that no water or moisture remains.

⚠ Only transport firearms in dry and clean condition.

4.5 Storage

⚠ Firearms that are not in use must be kept in a secure place under lock and key.

⚠ Firearms must always be stored in an unloaded and unlocked condition.

⚠ Ammunitions must be kept in a separate place under lock and key.

4.6 Hearing and Eye Protection

INSTRUCTION!

For your own safety, approved eye protection must be used during shooting! Shooting without safety equipment can cause vision damage.

INSTRUCTION!

For your own safety, approved hearing protection must be used during shooting! Shooting without safety equipment can cause hearing damage.

5. Legal

NOTE!

The applicable firearms legislation, regulations and provisions for the respective territory, and also the safety rules of the hunting and sporting organisations must be observed.

6. Intended Use

ANSCHÜTZ firearms must only be used in hunting grounds and in shooting ranges (for sport and hunting events) and may only be used by persons who hold the appropriate firearms permit.

NOTE!

A firearm must only ever be used for its designated purpose.

7. Liability

J.G. ANSCHÜTZ GmbH & Co. KG assumes no liability or claims for damages of any sort which arise from:

- failure to comply with the instructions in this user manual,
- improper treatment or repair,
- use of non-original ANSCHÜTZ parts,
- improper handling or care,
- negligence,
- removal of the sealing finish,
- unauthorized tampering or modifications, or
- transport damages.

CAUTION!

Modifications to or tampering with the firearm or its parts are forbidden and may possibly infringe the warranty conditions. Alterations of this kind can have an adverse affect on the safe use of the product and lead to accidents that endanger life and limb. In such cases the warranty is automatically void.

⚠ Before each use, the firearm must be examined for any changes.

8. Firearm Operations

8.1 Bolt

NOTE!

The rifle and the bolt are packed separately for reasons of safety and must still be assembled.

8.1.1 Install Bolt

The bolt must be cocked to be installed into the receiver. If the bolt is removed from the receiver and un-cocked for cleaning or inspection, it will need to be cocked manually before it can be reinstalled into the rifle. Cock the bolt as follows:

Fig. 2 Bolt uncocked, firing pin [SB] not visible

▶ First fix the bolt on the firing pin guide [SF].

CAUTION!

Physical damage!

▶ When fixing the bolt, make sure that the bolt does not get scratched or damaged.

Fig. 3 Bolt fixed

▶ Turn the bolt handle downwards clockwise until the bolt is cocked (you will hear a sound as it engages).

▶ When complete, you will see the firing pin [SB], protruding from the rear of the bolt sleeve.

Fig. 4 Bolt cocked, firing pin [SB] visible

CAUTION!

Risk of injury!

▶ Be careful to not pinch your hand or fingers as the bolt cocks.

✔ The bolt [2] is now cocked and ready to be installed in the receiver [7].

▶ Slide the cocked bolt [2] into the rear of the receiver [7], actuate the trigger and push the bolt [2] into the receiver until it stops (arrow direction).

NOTE!

To insert the bolt, the bolt stop does not have to be pressed. But the trigger must be actuated and hold in rear position.

▶ Close the bolt handle [3] down to the right.

Fig. 5 Install Bolt

✔ The bolt [2] is installed.

✔ The rifle is now cocked and ready for use.

8.1.2 Bolt Operation

The bolt operates on a "cock on open" system where the bolt is cocked when lifting the bolt handle to open the bolt. When closing the bolt, the trigger group holds the firing pin in the cocked position until the trigger is pulled.

To operate the bolt:

- ▶ Lift the bolt handle to unlock the bolt lugs; this also cocks the bolt at this point.
- ▶ Pull back on the bolt handle until the bolt comes to a stop against the bolt-stop latch. This operation will also eject the spent case after the shot.
- ▶ Push forward on the bolt handle until it stops, then rotate the bolt handle down to the right until the bolt handle comes to a stop.
  This operation will also load a live round into the chamber if a loaded magazine is installed in the rifle.
- ▶ You will also see the firing pin [SB] protruding from the rear of the bolt sleeve.
- ▶ The rifle is now ready to fire.

NOTE!

The bolt [2] can only be slid into the receiver [7] when cocked.

CAUTION!

Danger to life!

Unintentional discharge as a result of loaded, unsecured firearm.

- ▶ Keep the muzzle of the firearm pointing in a safe direction.
- ▶ Engage the safety catch after loading the firearm.

CAUTION!

Danger to life!

Unintentional discharge as a result of inattentiveness while engaging the safety catch or as a result of possible malfunctions after securing.

- ▶ Even when the safety catch is engaged, the muzzle of a firearm must never be held in a direction where it can cause damage or endanger life.

8.1.3 Remove Bolt

- ▶ The rifle uses a bolt stop [4] to limit reward travel of the bolt. Unlike other models, you do not need to pull the trigger to remove the bolt.
  To remove the bolt:
- ▶ Lift the bolt handle [3] and pull the bolt toward the back of the rifle (direction of arrow).

Fig. 6 Open and remove bolt

- ▶ Press the bolt stop [4] into the receiver, actuate and hold the trigger, then pull the bolt [2] out of the receiver [7].

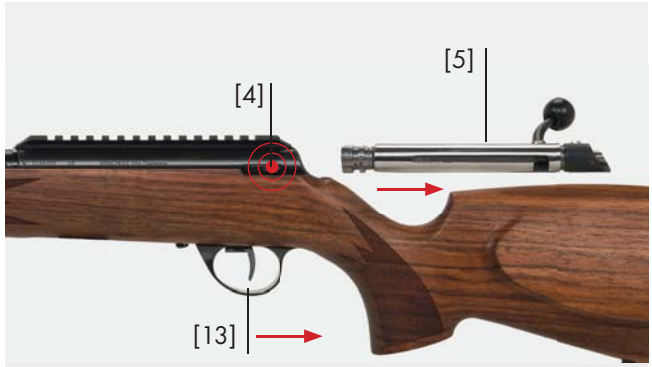

Fig. 7 Bolt removed

✔ The bolt is removed.

8.2 Safety Operations

NOTE!

The safety can only be operated when the bolt is cocked. In the following, the general procedure "securing/unlocking" is described.

8.2.1 Safety Engagement

▶ Push the safety lever [5] toward the rear (arrow direction). The red point is not visible.

Fig. 8 Safety lever "secure"

✔ The rifle is cocked and locked.

✔ The firing pin [SB] is visible.

8.2.2 Safety Release

▶ Bring safety lever [5] into the firing position (arrow direction). The red point is visible.

Fig. 9 Safety lever "ready to fire" (red point visible)

✔ The rifle is cocked (firing pin [SB] visible) and ready to fire.

8.3 Magazine

CAUTION!

Use only ammunition having a muzzle speed V0 of at least 280 m/s (920 fps).

Non-observance of this will result in loss of liability and the warranty will become void.

8.3.1 Loading

⚠ Only load the rifle immediately before use.

▶ Press the magazine release lever [15] toward the front (in arrow direction).

Fig. 10 Unlock magazine

✔ The magazine [16] is unlocked and can now be removed.

▶ Take the magazine [16] out of the magazine guide by hand.

Fig. 11 Remove Magazine

CAUTION!

Danger to life!

Incorrect caliber in the magazine.

▶ Only use the caliber specified on the barrel of the firearm.

CAUTION!

After unlocking, the magazine can drop free from the firearm.

During the unlocking of the magazine, keep one hand under the magazine.

▶ Place the cartridge, with the cartridge rim pointing forwards, centrally on the feeder (at the left-hand tip of the arrow).

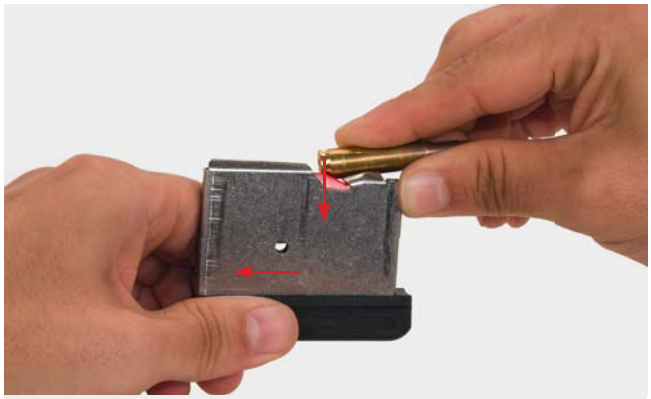

Fig. 12 Load Magazine

▶ Push the feeder down with the cartridge and slide the cartridge into the magazine [16].

Fig. 13 Magazine loaded

⚠ Only genuine ANSCHÜTZ magazines may be used.

⚠ The specified capacity of the magazines must not be exceeded.

⚠ Only cartridges of the calibre specified on the barrel of the firearm may be used.

⚠ Only new, clean, factory-charged ammunition of the calibre permitted for the firearm may be used.

⚠ The ammunitions must conform to the specifications of the C.I.P or SAAMI.

▶ Insert magazine [16] (in arrow direction) into the firearm until it locks in place.

Fig. 14 Insert Magazine

The rifle is a repeating rifle which feeds ammunition directly from the attached magazine. Operating the bolt of the rifle will automatically feed a live round into the chamber while ejecting the spent casing.

To operate:

▶ Push the bolt [2] forward and the next round from the magazine will slide out from the top of the magazine's feeding lips and enter the chamber.

▶ Maintain a smooth and even motion to prevent jarring loose the live round.

Fig. 15 Rifle is loaded, cocked and locked.

✔ The rifle is now loaded, cocked with safety engaged.

- The rifle is now ready to fire. You may either choose to engage the safety lever on the rifle or carefully aim at the target and pull the trigger.
- Lift the bolt handle [3] and pull the bolt [2] up to the stop against the bolt catch [4].
- The cartridge in the receiver is ejected.
- Closing the bolt [2] again causes the next cartridge to slide into the chamber from the magazine.

NOTE!

By closing the bolt, the cartridge is fed into the barrel chamber.

CAUTION!

Danger to life!

Unintentional discharge due to loaded, unsecured firearm.

- Keep firearm muzzle in a secure direction.
- Secure the firearm after loading.

CAUTION!

Danger to life!

Unintentional discharge due to inattention in securing the firearm, or due to malfunctions after securing.

- Even when secured, the firearm muzzle must never be held in a direction in which it can cause damage or endanger life.

8.3.2 Unloading / Uncocking the Bolt for Firearm Storage

It is suggested that the rifle is to be stored with the bolt uncocked. This prolongs firing-pin spring life and maintains a consistent ignition of the bolt. Follow the steps below to uncock the rifle for storage.

CAUTION!

Danger to life!

Unintentional discharge due to loaded, unsecured firearm.

- Keep firearm muzzle in a secure direction.
- You must verify there is no live ammunition int he magazine and that the chamber is empty before performing this operation.

- First verify there is no ammunition in the magazine [16] or receiver/chamber [7] .
- Make sure that the safety [5] is not engaged (the red dot is not visible).
- Open the bolt (lift bolt handle [3], press in arrow direction), then pull towards the rear until it reaches the bolt stop [4].

Fig. 16 Open Bolt

- Press the magazine release lever [15] toward the front (in arrow direction).

Fig. 17 Push forward magazine release lever

✔ The magazine [16] is unlocked and can now be removed.

Fig. 18 Remove magazine

CAUTION!

Property damage!

After unlocking, the magazine can drop free from the firearm.

▶ During the unlocking of the magazine, keep one hand under the magazine.

▶ Bring the safety lever [5] into the firing position (arrow direction).

✔ The red dot is visible.

Fig. 19 Press safety lever toward the front (unlock)

▶ With the rifle pointed in a safe direction, pull the trigger and hold in the rear position. This is best done with the left hand.

▶ Gently push the bolt forward and slowly close the bolt handle. This will allow the firing pin to move safely forward inside the bolt and reduce the firing pin spring pressure.

Fig. 20 Close Bolt

✔ The rifle is now uncocked and ready for transport and storage.

✔ The firing pin is not visible.

8.4 Trigger

8.4.1 Two Stage Trigger

Two stage trigger 5098/71

[a] Adjusting screw sear engagement
[b] Adjusting screw trigger weight
[c] Adjusting screw trigger blade

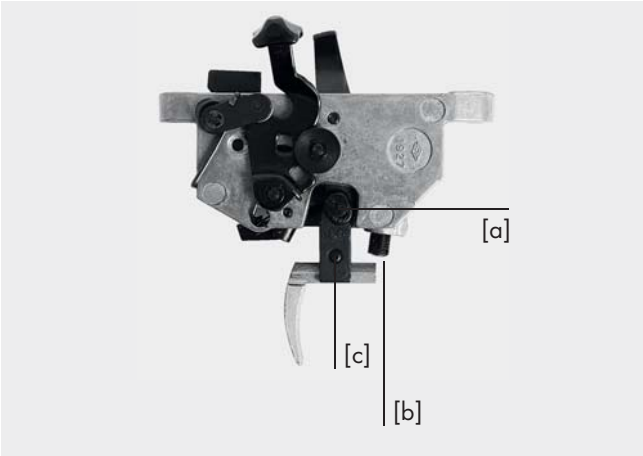

Fig. 21 Two stage trigger 5098/71

NOTE!

Settings only to be carried out by an authorised specialist dealer/gunsmith.

CAUTION!

Danger to life!

Danger to life due to loaded firearm.

▶ Do not look into the muzzle.

▶ Keep firearm muzzle in a safe direction.

▶ Make sure that the rifle is unloaded when carrying out allignment and adjustment procedures

CAUTION!

Property Damage!

▶ The bolt must be opened before making changes to the trigger.

8.4.2 Trigger Weight

Setting of the trigger weight using an adjusting screw trigger weight [f]:

- turn right (clockwise) =
  Trigger weight increases (+)
- turn left (anticlockwise) =
  Trigger weight decreases (-)

▶ The trigger function must be monitored after each change.

8.4.3 Sear engagement / sear encroachment Two stage trigger

The sear engagement denotes the travel from the second stage to the release of the trigger.

CAUTION!

Danger to life!

Unintentional discharge as a result of too short a sear engagement and/or too low a trigger weight.

▶ Sear engagement is set too short.

▶ Trigger weight is set too low.

▶ Do not subject loaded and unsecured firearm to impact and do not use force to close the bolt.

Adjusting the weight of first stage by means of the weight of first stage adjusting screw [a]:

- turn clockwise =
  first stage weight is increased (+)
- turn anticlockwise =
  first stage weight is reduced (-)

Setting the optimum sear engagement:

⚠ The rifle must be unloaded.

▶ Cock the rifle and release the trigger (check whether the trigger releases as desired).

If the sear engagement is too long:

There is a short travel from the second stage to the release of the trigger (so called "pull" or "tug").

- ▶ After cocking and releasing the trigger, turn adjusting screw [2] clockwise in steps (approx. 1/8 turn each time).
- ▶ Repeat the procedure until the second stage is no longer perceptible.
- ▶ Then turn back 1/3 turn anticlockwise
- ✔ The optimum sear engagement is now set

If the sear engagement is too short:

There is no longer any second stage. The trigger releases indefinably without a second stage.

- ▶ After cocking, turn the adjusting screw [2] at least 1/4 turn anticlockwise, release the trigger and check whether there is a second stage.
- ▶ If not, repeat the procedure until there is a perceptible second stage.
- ▶ As soon as there is a perceptible second stage, proceed according to the subsection "If the sear engagement is too long" to achieve the optimum sear engagement.

8.4.4 Sear engagement / sear encroachment single stage trigger

The sear engagement denotes the travel from the two stage to the release of the trigger.

CAUTION!

Danger to life!

Unintentional discharge as a result of too short a sear engagement and/or too low a trigger weight.

- ▶ Sear engagement is set too short.
- ▶ Trigger weight is set too low.
- ▶ Do not subject loaded and unsecured firearm to impact and do not use force to close the bolt.

Adjusting the sear engagement on a two stage trigger by means of adjusting screw [a]:

- ▶ Cock the rifle
- ▶ Turn two stage adjusting screw [b] anticlockwise until the trigger releases.
- ▶ From this setting, turn adjusting screw sear engagment [b] approx. ⅓ turn clockwise.

8.4.5 Trigger malfunctions caused by misadjustment

Proceed as follows in the event of malfunctions caused by a misadjusted trigger:

- ▶ The trigger function must be checked after every change.
- ▶ When the malfunction has been rectified, check the desired trigger characteristic and adjust it again if necessary.

The trigger catches the firing pin but does not fire when pulled:

- Check whether the trigger is released.

The trigger does not catch the firing pin (the single stage trigger is set too tight):

- Turn the adjusting screw [a] approx. 1 or 2 turns anticlockwise.

▶ Cock the rifle

▶ Turn two stage adjusting screw [b] anticlockwise until the trigger releases.

▶ From this setting, turn adjusting screw [b] approx. ⅓ turn clockwise.

8.4.6 Moving the trigger blade

▶ Release clamping screw [c].

▶ The trigger blade can be moved along the clamping guide.

▶ Tighten the clamping screw [c] hand-tight.

NOTE!

In the case of changing the trigger, be sure that the bolt is removed from the receiver when assemble the trigger.

8.4.7 Single stage trigger 5097/2D Tuning

Caption

[a] Adjusting screw sear engagement

[b] Adjusting screw trigger weight

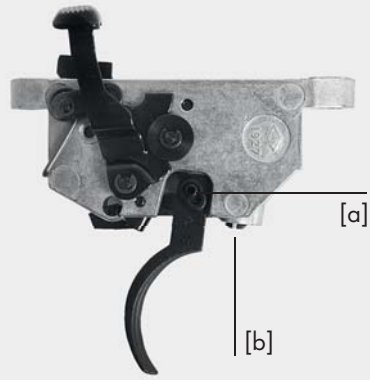

Fig. 22 Single stage trigger 5097/2D Tuning

NOTE!

Settings only to be carried out by an authorised specialist dealer/gunsmith.

CAUTION!

Danger to life!

Danger to life due to loaded firearm.

▶ Do not look into the muzzle.

▶ Keep firearm muzzle in a safe direction.

▶ Make sure that the rifle is unloaded when carrying out allignment and adjustment procedures.

CAUTION!

Property Damage!

▶ The bolt must be opened before making changes to the trigger.

8.4.8 Trigger Weight

Setting of the trigger weight using an adjusting screw trigger weight [b]:

- turn right (clockwise) =
  Trigger weight increases (+)

- turn left (anticlockwise) =
  Trigger weight decreases (–)

▶ The trigger function must be monitored after each change.

The trigger and first stage weights are mechanically interdependent. Any adjustment always results in a small concurrent change in the trigger or first stage weight.

8.4.9 Setting the optimum sear engagement on single stage trigger

Adjusting the sear engagement on a single stage trigger by means of adjusting screw [a]:

▶ Cock the firearm.

▶ Turn the adjusting screw sear engagement [a] clockwise until the trigger releases.

▶ From this position, turn back the adjusting screw sear engagement [a] 1/3 turn anticlockwise.

CAUTION!

Danger to life!

Unintentional discharge as a result of too short a sear engagement and/or too low a trigger weight.

▶ Sear engagement is set too short.

▶ Trigger weight is set too low.

▶ Do not subject loaded and unsecured firearm to impact and do not use force to close the bolt.

8.4.10 Trigger malfunctions caused by misadjustment

Proceed as follows in the event of malfunctions caused by a misadjusted trigger:

▶ The trigger function must be checked after every change.

▶ When the malfunction has been rectified, check the desired trigger characteristic and adjust it again if necessary.

The trigger catches the firing pin but does not fire when pulled:

- Check whether the trigger is released.

The trigger does not catch the firing pin:
(The single stage trigger is set too tight:):

- Turn the adjusting screw sear engagement [a] anti-clockwise in approx. 1-2 turn.

▶ Cock firearm.

▶ Turn the adjusting screw sear engagement [a] (two stage) clockwise until the trigger releases.

▶ From this position, turn back the adjusting screw sear engagement [a] 1/3 turn anticlockwise.

8.5 Barreled Action and Stock Assembly

Fig. 23 Major Components of the 1771

- Remove the magazine [16]
- Loosen and remove both action screws (4 mm Allen key) [SV 1 + SV 2].
- Remove barrel action [SY] from stock [1].
- The connection of the barrel action and the stock is done in reverse.

⚠ First tighten the front action screw [SV 2] to 4 Nm, then tighten the rear action screw [SV 1] also to 4 Nm (both screws using a 4 mm Allen key).

NOTE!

Settling of the stock wood can occur after the initial assembly of the barrelled action [SY]. ANSCHÜTZ therefore recommends tightening the barrelled action connection screws [SV 1] and [SV 2] after a time.

⚠ The action screws must be checked for firm seating before each shooting session.

9. Maintenance/Cleaning

9.1 General

CAUTION!

Danger to life!

Danger to life due to loaded firearm.

▶ Before conducting any maintenance or inspection on the rifle, ensure the rifle and magazines are completely unloaded. It is advisable to remove all live ammunition from the work area when performing maintenance on the rifle.

CAUTION!

Injury and physical damage!

Danger of injury or physical damage as a result of not removing the oil from the barrel and chamber.

▶ Each time before shooting, any oil or foreign objects must be removed from the barrel and chamber.

CAUTION!

Attention must always be paid to potential changes or damages to the rifle. In case of possible change or damage, the rifle must immediately be brought to an authorised gunsmith or sent to ANSCHÜTZ.

NOTE!

The rifle should be protected against dust, sand, humidity, and excessive heat.

NOTE!

In order to reduce the danger of stock breakages during transport, ANSCHÜTZ recommends removing the barreled action from the stock, in particular during flights.

NOTE!

In the use of silencers, clean your rifle, in particular the bolt, after each use. Also observe the cleaning notices from your silencer manufacturer.

NOTE!

Dry firing:
To be on the safe side, always use a dummy round for "dry firing" to prevent damage!

NOTE!

In the cleaning of plastic parts (e.g. magazine bottoms, feeder), only use oils which will not damage, corrode, or break down the plastic.

NOTE!

The gun case/the sheath should be cleaned regularly to remove dust and lint.

The rifle cases and soft cases should have a smooth, dust-repellent lining.

For long-term storage, the gun case/the sheath should be open in order to allow humidity to escape. Placing a humidity absorber can reduce the formation of humidity.

NOTE!

Keep the stock dry, free of water and avoid the formation of condensation or moisture (water).

Ensure that the outside surface of the stock does not come into contact with any solvents, cleaning fluids, or other substances.

Do not affix any labels or other objects to the stock. This can lead to damage to the surface of the stock.

NOTE!

Unless indicated otherwise, please only hand-tighten the screws to prevent damage!

NOTE!

Make sure not to damage the stock when removing and installing the bolt! Incorrect handling and negligence does not constitute a warrantable claim.

NOTE!

After each use of the rifle, wipe the steel parts with a thin film of oil and clean the barrel thoroughly.

In transport from cold to warm spaces, condensation or moisture (water) can form on metal parts and in the interior of the barrel. Wipe these parts down with a light oil to remove moisture.

No other aids (felt plugs, non approved grease, etc.) should be used for cleaning the barrel.

9.2 Cleaning of the Barrel

If the barrel is only slightly dirty, use a plastic brush to clean it.

▶ Oil the plastic brush lightly and push it through the barrel from the chamber end to the muzzle using a suitabble cleaning rod and cleaning rod guide.

Fig. 24 Plastic Brush

▶ If the barrel is very dirty, use a bronze brush together with a suitable barrel cleaner and clean in the same way as with the plastic brush.

Fig. 25 Bronze brush

NOTE!

Pay attention to the user instructions of the cleaner!

▶ Push a cotton patch through the barrel several times to dry the barrel.

NOTE!

It is essential to re-oil the barrel after using ammonia-containing cleaning agents, to avoid the risk of corrosion.

9.3 Maintenance Intervals

Before Shooting

- Carefully remove excess oil from the barrel and chamber.

⚠ The de-oiling of the rifle should be carried out at room temperature, as too many residues can be left in the barrel if it is very cold.

- Fire up to 10 rounds after barrel cleaning to restore accuracy.

After Shooting

- Allow rifle to warm to room temperature with opened bolt (and opened snow cap - if available especially on biathlon rifles).
- Carefully remove condensation or moisture (water) on the exterior parts.
- Dismantle rifle and likewise clean individual parts of condensation or moisture (water) if is present.
- Clean barrel with plastic brush and cleaning solvent then dry with cotton patch.
- Oil rifle with a suitable firearm oil, oil barrel with special barrel care products.

With new Rifle (up to 100 shots) on 10-shot intervals, then in at least 50-shot intervals

- Clean the barrel with a suitable barrel cleaner using a plastic brush or bronze brush from the chamber to the muzzle.

⚠ Do not pull the brush back and forth in the barrel.

- Unscrew the brass brush outside the muzzle and carefully pull the cleaning rod back through the barrel.
- Push a few cotton patches with solvent through the barrel. Then follow with dry patches until clean.
- Wipe steel parts with oiled cloth and stock with dry cloth.

9.4 Maintenance of the Trigger

- Keep the trigger dry and dust-free (all necessary internal parts have been applied with a long lasting oil by ANSCHÜTZ).

- Never wash out the inner parts of the trigger with a spray or oil, to avoid contamination of the trigger parts.

⚠ In maintaining the rifle, no dust, residue of solvents, greases, as well as unsuitable oils may get into the trigger device.

9.5 Maintenance of the Bolt

ANSCHÜTZ recommends, that for optimal performance the compression spring (c) should be exchanged every 5 years by an authorized gunsmith.

9.5.1 Bolt Disassembly

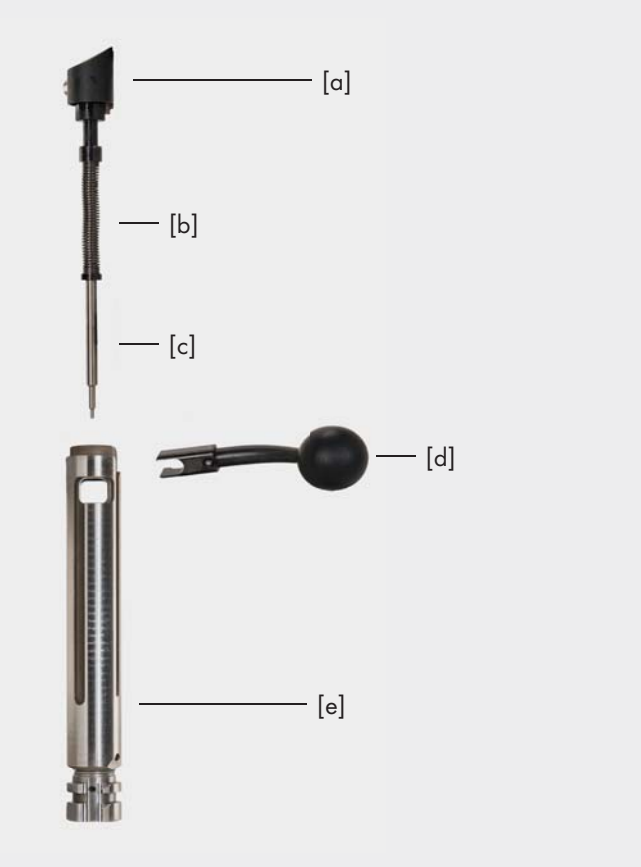

Fig. 26 Bolt dissambled

Caption

[a] Firing pin guide
[b] Firing pin spring
[c] Firing pin
[d] Bolt handle
[e] Receiver

NOTE!

The dismantling of the bolt should only be done for maintenance purposes by an authorised gunsmith.

▶ Removing the bolt (see Chapter 8.1.3).

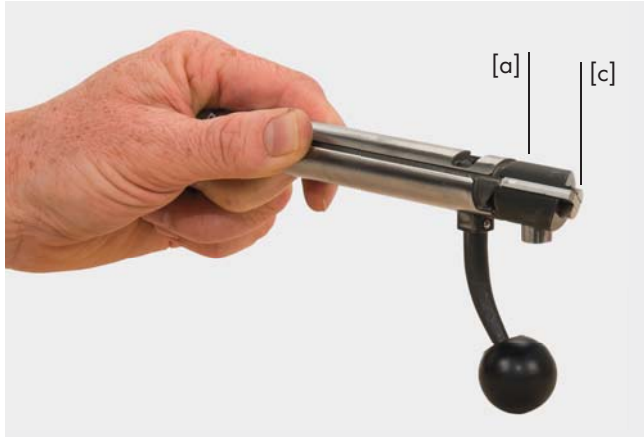

Fig. 27 Bolt cocked, Firing pin visible

▶ Uncock the bolt [2] (turn the firing pin guide [a] anticlockwise).

Fig. 28 Uncock the bolt

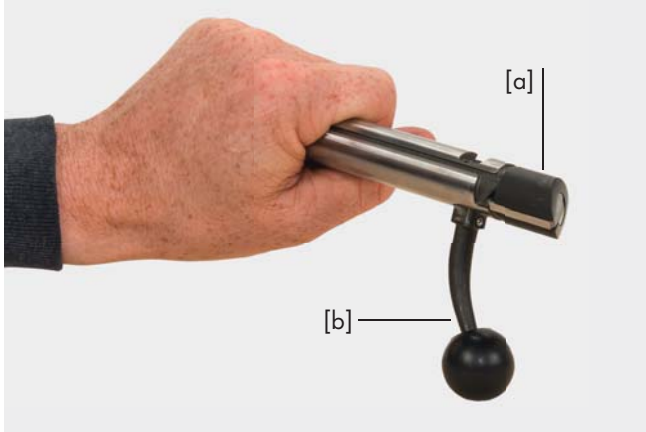

Fig. 29 Bolt uncocked, firing pin is not visible

✔ The bolt is uncocked

▶ Push the firing pin guide [a] downwards and at the same time pull the bolt handle [b] out of the receiver [e].

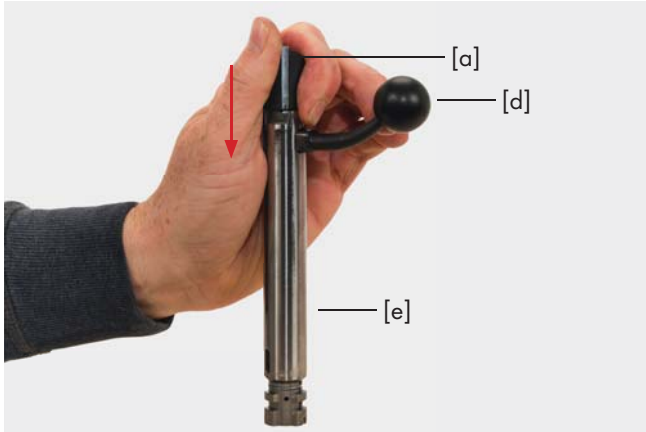

Fig. 30 Pushing the firing pin guide downwards

Fig. 31 Removing the bolt handle

▶ Pull out firing pin [c] with spring [b] and firing pin guide [a].

Fig. 32 Pulling out firing pin with firing pin spring

✔ The bolt is now dismantled and can be cleaned.

NOTE!

Clean all parts of the disassembled bolt of dust and powder residue with a thin, non-hardening oil.

Then, cover the components of the bolt with a light film of oil.

9.5.2 Assembling the bolt

▶ Reassemble in the reverse order of chapter 9.5.1 "Disassembling the lock".

NOTE!

The fully assembled bolt must be cocked before inserting in the receiver. Cocking the bolt (see Chapter 8.1.2).

NOTE!

ANSCHÜTZ recommends having the headspace checked by an authorised gunsmith at regular intervals.

10. Trouble Shooting

CAUTION!

In the event of malfunctions (e.g. rounds not discharged, etc.) the rifle must be unloaded, secured and taken without delay to a specialist dealer or gunsmith or sent to ANSCHÜTZ.

NOTE!

The technical data does not correspond to the entire model range. Specific thechnical model data can be found on www.anschuetz-sport.com.

11. Disposal

The disposal of the rifle must be carried out and certified by a specialist dealer or gunsmith.

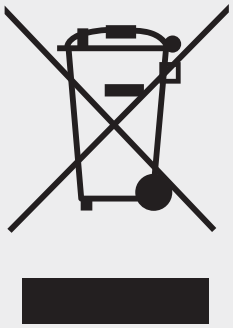

12. Other Information

Additional information is available online at
www.anschuetz-sport.com

To distribute information about news on these and other products, ANSCHÜTZ also sends out the ANSCHÜTZ newsletter, which is free to subscribe to, online.

NOTE!

For hygienic reasons, please wash your hands after using a firearm or handling ammunitions. There may be, for example, oils, greases, or other contaminations on the firearm.

13. Shooting Performance

The shooting precision of a firearm depends on several factors. One very important factor in this respect is the ammunition. Not every barrel shoots with the same efficiency. Considerable performance differences are apparent with each ammunition type.

Optics and its mount are just as important. Parallax, loose mounts, faulty reticle adjustment and inappropriate mount are the most frequent causes of poor shooting performance. As such, only brand-name optics and mounts should be used and quality ammunition matched to your rifle.

Even ammunition from the same manufacturer and the same batch can, from one production lot to another, and from one firearm to another, result in varying shooting performance and effecting accuracy. When the most suitable ammunition,optics and mount have been selected we can warranty the excellent shooting performance of our famous ANSCHÜTZ rifle. See warranty card.

Please also note that any attachment or accessory (irrespective of the manufacturer), such as sound moderators, muzzle flash suppressors, and optics, will make a contribution to the precision and shooting performance and may have an effect on these aspects.

NOTE!

Each bolt is adjusted to an associated rifle in order to achieve an optimal shooting performance. For reasons of safety, the bolts must not be interchanged.

14. Warranty Card

ANSCHÜTZ

EINFACH **EINS** WERDEN!

<<< WARRANTY >>>

1. Material:

This product has been released for sale after the product itself, its materials and individual components have been subjected to strict inspection, or the rifle has demonstrated its durability and function during test shooting. J.G. ANSCHÜTZ GmbH & Co. KG offers a full guarantee covering material and manufacturing faults (excluding broken stocks and springs) for a period of two years, provided that the fault can be shown to have been present at the time of handover of the product. No warranty claims will be accepted by J.G. ANSCHÜTZ GmbH & Co. KG for faults that are the result of improper use or unauthorised repairs. The item will either be repaired or replaced at our discretion. Claims for compensation - put forward for any legal reason whatsoever – are excluded.

2. Shooting Performance:

The purchaser undertakes to inform J.G. ANSCHÜTZ GmbH & Co. KG in writing of any faults detected in shooting performance within one month of purchase with the submission of their own shooting record. J.G. ANSCHÜTZ GmbH & Co. KG reserves the right to transfer the rifle to an independent agency for inspection (DEVA or a national ballistics office). Should such an agency confirm excellent shooting performance, J.G. ANSCHÜTZ GmbH & Co. KG is entitled to charge the purchaser the costs of the rifle inspection. The accepted warranties do not apply to rifle damage resulting from mechanical effects and improper use or care by the purchaser. The warranty is excluded if the rifle has been repaired or modified by unauthorised persons. Likewise, the warranty is cancelled when using reloaded ammunition or ammunition which is not CIP approved.

In the event of a warranty/damage claim please enclose this card, completed and signed by your dealer, with the product.

J.G. ANSCHÜTZ GmbH & Co. KG · Jagd- und Sportwaffenfabrik

Postfach 1128 · D-89001 Ulm/Germany · www.anschuetz-sport.com

Serial-No.:

Date:

Bought at:

(Stamp and signature of dealer)